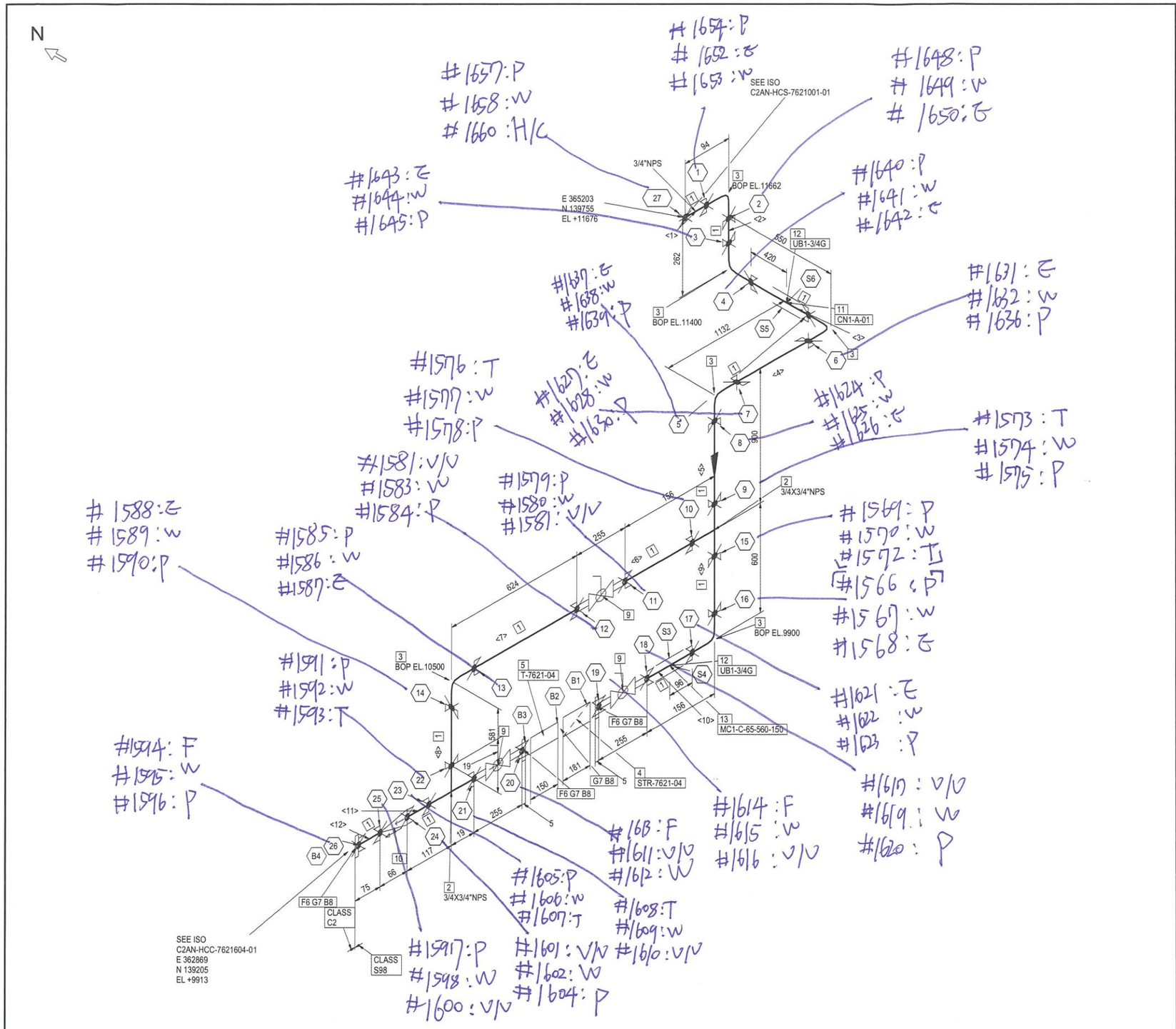

NOTE ; ASTERISK MARK(*) SHALL BE ADJUSTED AT FIELD AS PER THE FINAL VENDOR PRINT.

BILL OF MATERIALS

ERECTION MATERIALS

NO	COMPONENT DESCRIPTION	SIZE	QTY	MAT'L CLASS	SHORT CODE	ITEM
1	PIPE SMLS ASTM A312-316/316L SCH40S PE	3/4"	5.0 M	S98	P	PA02-000000956
2	TEE SW CL3000 ASTM A182-F316/316L	3/4X3/4"	2	S98	T	PB99-000038722
3	90 DEG. ELBOW (LR) SW CL3000 ASTM A182-F316/316L	3/4"	6	S98	E	PB99-000038441
4	TAG NO : STR-7621-04, STRAINER - Y-TYPE	3/4"	1			SPECIALTY
5	TAG NO : T-7621-04, STEAM TRAP - LINE TRAP	3/4"	1			SPECIALTY
6	SOCKET-WELDING FLANGE RF CL150 ASTM A182-F316/316L SCH40S	3/4"	3	S98	F	PB01-000004840
7	SPIRAL WOUND GASKET O-RING: SS 304 CL150 HOOP : SS 316L FILLER : GRAPHITE 4.5MM(0.18") THK.	3/4"	4	S98	G	PF01-000009264
8	70 STUD BOLT W/2-NUT HEAVY HEX. NUT ASTM A193-B8 CL.2 ASTM A194-8 UN/UNR x MM	1/2"	16	S98	B	PB99-000076882
9	BALL VALVE SW ANSI(ASTM) CL600 ASTM A351-CF8M SS316 TRIM RTFE SEAT FLOATING BALL FB 3 PIECE BODY LV. OP. (VAB060T)	3/4"	3	S98	VL	PP04-000007760
10	CHECK VALVE SW CL800 ASTM A182-F316/316L SS316 TRIM STELLITE SEATS BC PISTON DISC (VAC015)	3/4"	1	S98	VC	PP06-000009507
11	CN1-A-01	3/4"	1			CN1-A-H
12	UB1-3/4G	3/4"	2			UB1-G
13	MC1-C-65-560-150	3/4"	1			MC1-C-H

CUT PIPE LENGTH

PIECE NO	LENGTH (MM)	NPD (IN)	REMARKS	PIECE NO	LENGTH (MM)	NPD (IN)	REMARKS
<1>	75	3/4		<2>	224	3/4	
<3>	512	3/4		<4>	1094	3/4	
<5>	862	3/4		<6>	137	3/4	
<7>	605	3/4		<8>	562	3/4	
<9>	562	3/4		<10>	137	3/4	
<11>	98	3/4		<12>	70	3/4	

Project PROVIDENCE
Approval For Construction
PIPING MANAGER Bea Chang Won
2026-01-02

NPS (Inch)	MAT'L CLASS	OPER. PRFSS. (bar.g)	OPER. TEMP. (°c)	DESIGN PRESS. (bar.g)	DESIGN TEMP. (°c)	TEST PRESS. (bar.g)	TEST MEDIUM	INSULATION TYPE	INSULATION TH'K (mm)	PAINT CODE	PWHT	NDE (RT,%)	STRESS
0.75	S98	3	144	4.0 / F.V	172	6	H	IHI	25	-	N	5	-

REV.	DATE	DESCRIPTION	PREPARED	CHECKED	APPROVED
2-A	02-01-26		N.H.PARK	M.H.SUNG	T.H.LIM
2	08-11-25	ISSUED FOR REVISION	N.H.PARK	M.H.SUNG	T.H.LIM
1	01-09-25	ISSUED FOR REVISION	N.H.PARK	M.H.SUNG	T.H.LIM
0-A	11-08-25		N.H.PARK	M.H.SUNG	T.H.LIM
0	23-07-25	ISSUED FOR INFORMATION	N.H.PARK	M.H.SUNG	T.H.LIM

PROJECT
PROJECT PROVIDENCE

LOTTE BIOLOGICS
LOTTE E&C

PART	AG	PLANT	N	AREA	CUT	CWA NO.	C2AN
P&ID NO.	K1-DSL-UT-PID-7621-01			PROJ. NO.	16480	FLUID	HCS
GAD NO.	-			LINE NO.	0.75-HCS-7621604-S98-IHI		
DWG NO.	C2AN-HCS-7621604-01			SH'T NO.	1 OF 1	REV.	2-A

PIPE modified at 16:13:28 Oct 2025, Drawing Created at 16:26:42 28 October 2025
PIPE NAME : 0.75-HCS-7621604-S98-IHI_C2AN-01

NOTE : THE ORIGINAL AND ALL COPIES OF THIS DRAWING TOGETHER WITH COPYRIGHT ARE THE SOLE PROPERTY OF LEC, SEOUL, KOREA AND SHALL NOT BE USED FOR ANY PURPOSE WITHOUT WRITTEN PERMISSION OF LEC.

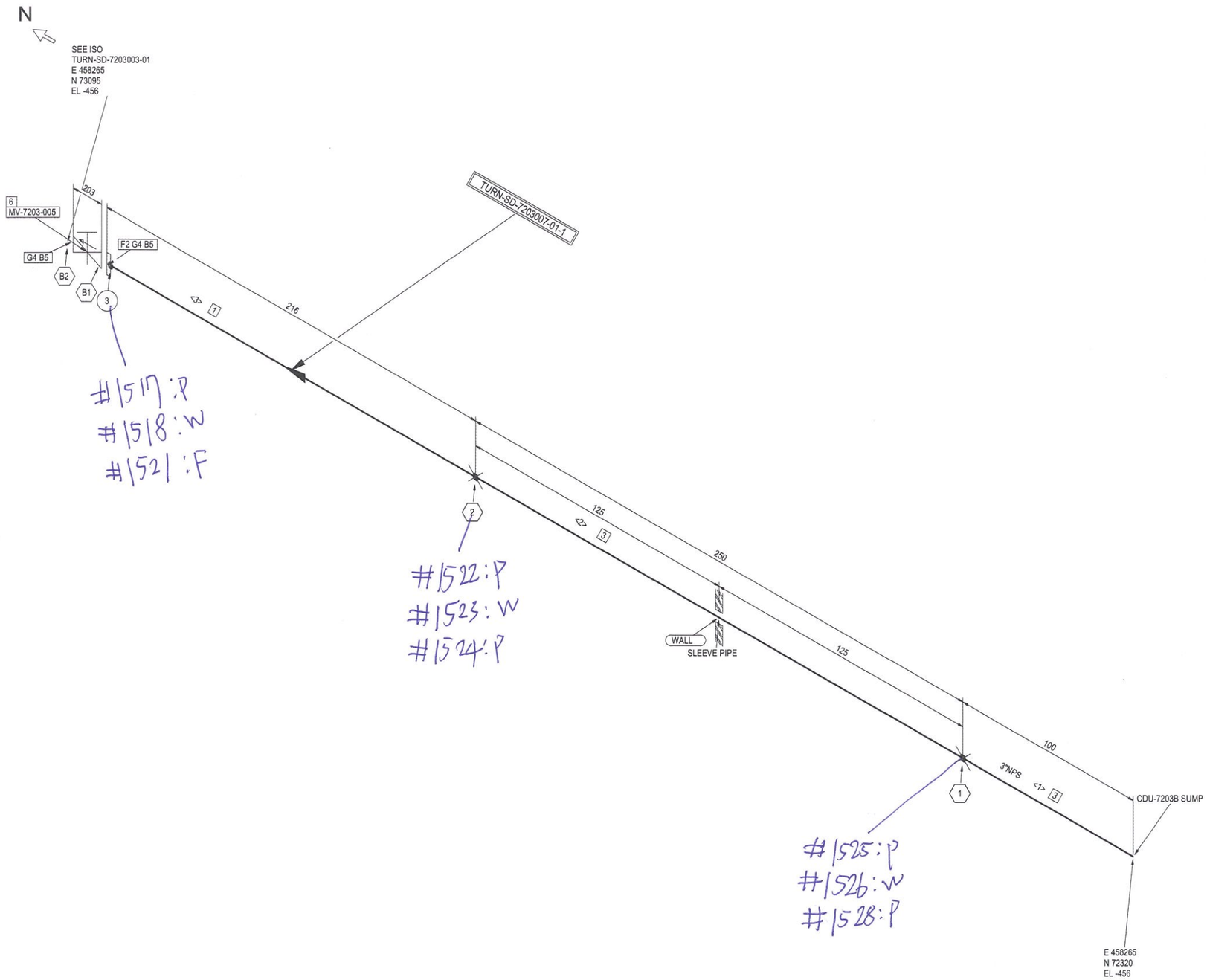

BILL OF MATERIALS

FABRICATION MATERIALS

NO	COMPONENT DESCRIPTION	SIZE	QTY	MAT'L CLASS	SHORT CODE	ITEM
1	PIPE EFW ASTM A312-316/316L SCH10S BE RT=100%	3"	0.3 M	S98	P	PA02-000001903
2	SLIP-ON FLANGE RF CL150 ASTM A182-F316/316L	3"	1	S98	F	PB01-000023956

ERECTION MATERIALS

NO	COMPONENT DESCRIPTION	SIZE	QTY	MAT'L CLASS	SHORT CODE	ITEM
3	PIPE EFW ASTM A312-316/316L SCH10S BE RT=100%	3"	0.4 M	S98	P	PA02-000001903
4	SPIRAL WOUND GASKET O-RING: SS 304 CL150 HOOP : SS 316L FILLER : GRAPHITE 4.5MM(0.18") THK.	3"	2	S98	G	PF01-000009268
5	100 STUD BOLT W/2-NUT HEAVY HEX. NUT ASTM A193-B8 CL.2 ASTM A194-8 UN/UNR x MM	5/8"	8	S98	B	PB99-000076890
6	GATE VALVE FLGD-RF CL150 ASTM A351-CF8M SS316 TRIM STELLITE SEATS BB OS&Y FLEX. WDG DISC HW. OP (VAV151)	3"	1	S98	VA	PP02-000010434

CUT PIPE LENGTH

PIECE NO	LENGTH (MM)	NPD (IN)	REMARKS	PIECE NO	LENGTH (MM)	NPD (IN)	REMARKS
<1>	100	3		<2>	250	3	
<3>	206	3					

Project PROVIDENCE
Approval For Construction
PIPING MANAGER Bea Chang Won
2025-08-01

NOTE ; ASTERISK MARK(*) SHALL BE ADJUSTED AT FIELD AS PER THE FINAL VENDOR PRINT.

NPS (Inch)	MAT'L CLASS	OPER. PRESS. (bar.g)	OPER. TEMP. (°c)	DESIGN PRESS. (bar.g)	DESIGN TEMP. (°c)	TEST PRESS. (bar.g)	TEST MEDIUM	INSULATION TYPE	INSULATION TH'K (mm)	PAINT CODE	PWHT	NDE (RT,%)	STRESS
3	S98	-	-	-	-	-	-	-	-	-	-	-	-

REV.	DATE	DESCRIPTION	PREPARED	CHECKED	APPROVED
0	01-08-25	ISSUED FOR INFORMATION	J.Y.CHO	M.H.SUNG	T.H.LIM

PROJECT
PROJECT PROVIDENCE

LOTTE BIOLOGICS
LOTTE E&C

PART	UG	PLANT	N	AREA	CWT	CWA NO.	TURN
P&ID NO.	-			PROJ. NO.	16480	FLUID	SD
GAD NO.	-			LINE NO.	3-SD-7203007-S98-N		
DWG NO.	TURN-SD-7203007-01					SH'T NO. 1 OF 1	REV. 0

PIPE modified at 15:11:24 Jul 2025 , Drawing Created at 12:58:34 25 July 2025
PIPE NAME : 3-SD-7203007-S98-N_TURN-01

NOTE : THE ORIGINAL AND ALL COPIES OF THIS DRAWING TOGETHER WITH COPYRIGHT ARE THE SOLE PROPERTY OF LEC, SEOUL, KOREA AND SHALL NOT BE USED FOR ANY PURPOSE WITHOUT WRITTEN PERMISSION OF LEC.

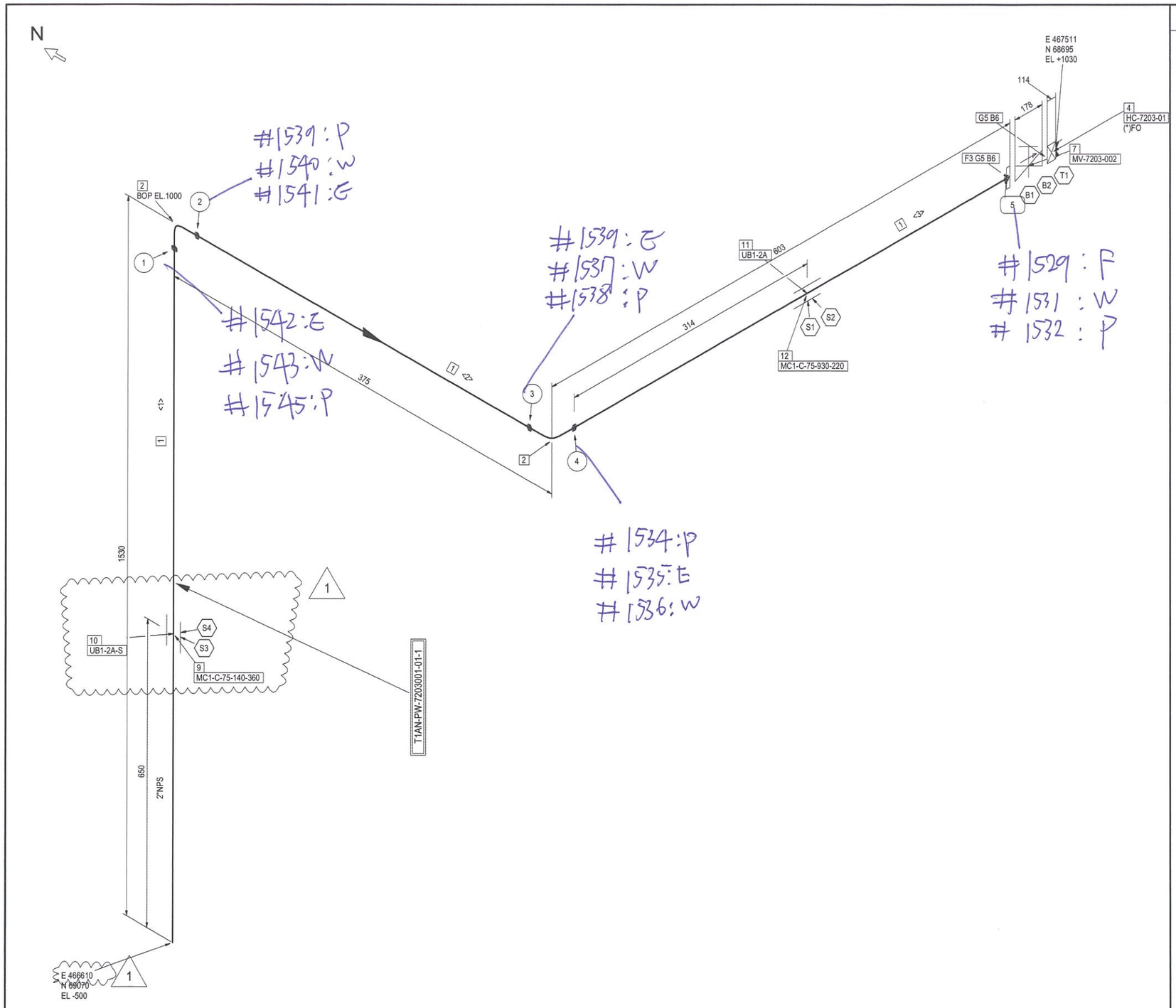

NOTE ; ASTERISK MARK(*) SHALL BE ADJUSTED AT FIELD AS PER THE FINAL VENDOR PRINT.

BILL OF MATERIALS

FABRICATION MATERIALS

NO	COMPONENT DESCRIPTION	SIZE	QTY	MAT'L CLASS	SHORT CODE	ITEM
1	PIPE EFW ASTM A312-316/316L SCH10S BE RT=100%	2"	2.2 M	S98	P	PA02-000001902
2	90 DEG. ELBOW (LR) BW WELDED ASTM A403-WP316/316L SCH10S	2"	2	S98	E	PB99-000038409
3	SLIP-ON FLANGE RF CL150 ASTM A182-F316/316L	2"	1	S98	F	PB01-000023955

ERECTION MATERIALS

NO	COMPONENT DESCRIPTION	SIZE	QTY	MAT'L CLASS	SHORT CODE	ITEM
4	TAG NO : HC-7203-01, QUICK COUPLING	2"	1			SPECIALTY
5	SPIRAL WOUND GASKET O-RING: SS 304 CL150 HOOP : SS 316L FILLER : GRAPHIT E 4.5MM(0.18") THK.	2"	2	S98	G	PF01-000009267
6	90 STUD BOLT W/2-NUT HEAVY HEX. NUT ASTM A193-B8 CL.2 ASTM A194-8 UN/UN R x MM	5/8"	8	S98	B	PB99-000076892
7	GATE VALVE FLGD-RF CL150 ASTM A351-CF8M SS316 TRIM STELLITE SEATS BB OS&Y FLEX. WDG DISC HW. OP (VAV151)	2"	1	S98	VA	PP02-000010433
8	General purpose ATTA	2"	1			-
9	MC1-C-75-140-360	2"	1			MC1-C-V(D)
10	UB1-2A-S	2"	1			UB1-A
11	UB1-2A	2"	1			UB1-A
12	MC1-C-75-930-220	2"	1			MC1-C-H

CUT PIPE LENGTH

PIECE NO	LENGTH (MM)	NPD (IN)	REMARKS	PIECE NO	LENGTH (MM)	NPD (IN)	REMARKS
<1>	1454	2		<2>	223	2	
<3>	517	2					

Project PROVIDENCE
Approval For Construction
PIPING MANAGER Bea Chang Won
2026-01-12

NPS (Inch)	MAT'L CLASS	OPER. PRFSS. (bar.g)	OPER. TEMP. (°c)	DESIGN PRESS. (bar.g)	DESIGN TEMP. (°c)	TEST PRESS. (bar.g)	TEST MEDIUM	INSULATION TYPE	INSULATION TH'K (mm)	PAINT CODE	PWHT	NDE (RT,%)	STRESS
2	S98	ATM	26	3.5	60	-	S	-	-		N	0	-

REV.	DATE	DESCRIPTION	PREPARED	CHECKED	APPROVED
1	12-01-26	ISSUED FOR REVISIED	J.Y.CHO	M.H.SUNG	T.H.LIM
0	07-08-25	ISSUED FOR INFORMATION	J.Y.CHO	M.H.SUNG	T.H.LIM

PROJECT
PROJECT PROVIDENCE

LOTTE BIOLOGICS
LOTTE E&C

PART	AG	PLANT	N	AREA	CWT	CWA NO.	T1AN
P&ID NO.	K1-CWT-UT-PID-7203			PROJ. NO.	16480	FLUID	PW
GAD NO.	-			LINE NO.	2-PW-7203001-S98-N		
DWG NO.	T1AN-PW-7203001-01			SH'T NO.	1 OF 1	REV.	1

PIPE modified at 9:39:29 Dec 2025 , Drawing Created at 09:39:15 29 December 2025
PIPE NAME : 2-PW-7203001-S98-N_T1AN-01

NOTE : THE ORIGINAL AND ALL COPIES OF THIS DRAWING TOGETHER WITH COPYRIGHT ARE THE SOLE PROPERTY OF LEC, SEOUL, KOREA AND SHALL NOT BE USED FOR ANY PURPOSE WITHOUT WRITTEN PERMISSION OF LEC.

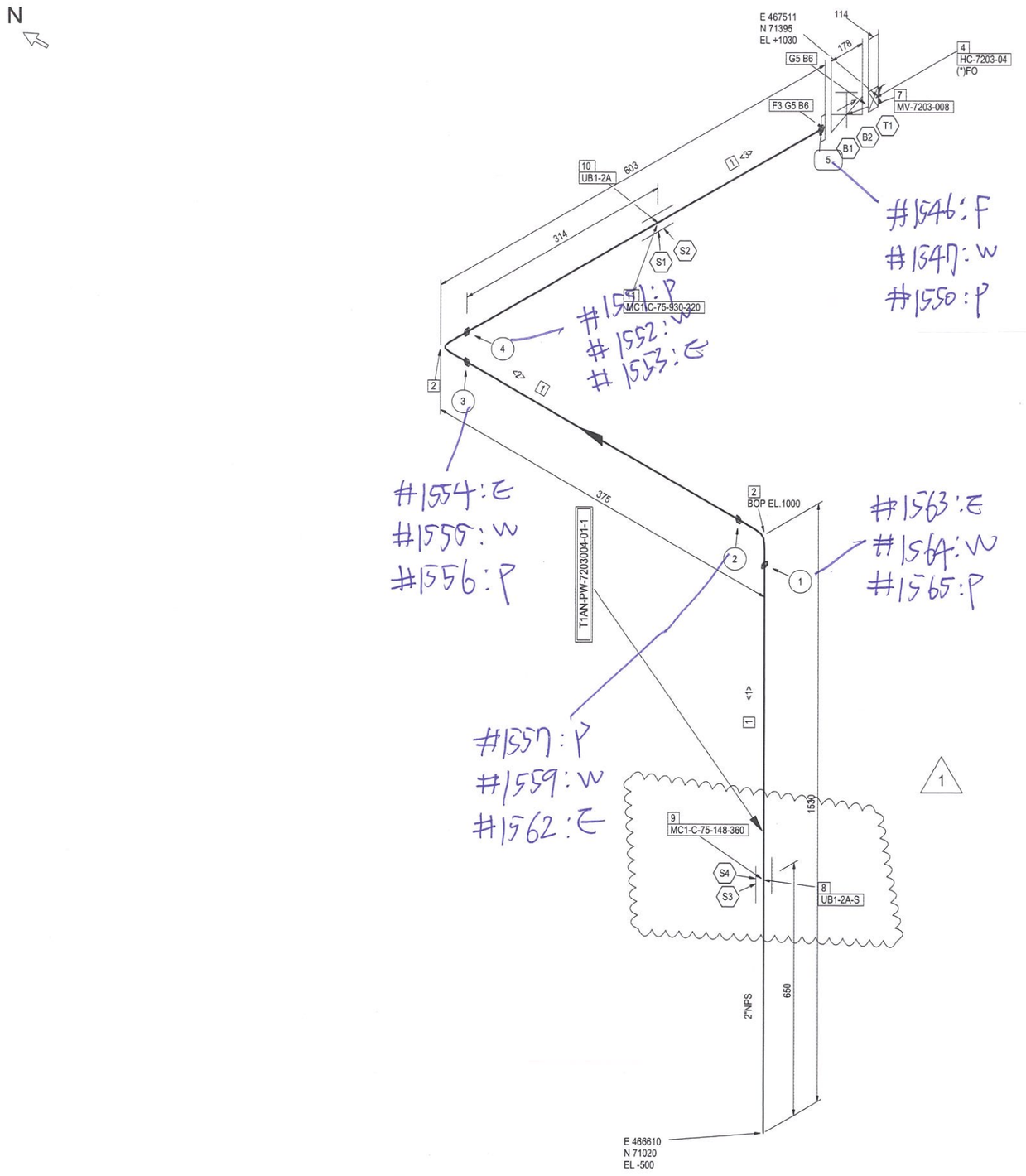

NOTE ; ASTERISK MARK(*) SHALL BE ADJUSTED AT FIELD AS PER THE FINAL VENDOR PRINT.

BILL OF MATERIALS

FABRICATION MATERIALS

NO	COMPONENT DESCRIPTION	SIZE	QTY	MAT'L CLASS	SHORT CODE	ITEM
1	PIPE EFW ASTM A312-316/316L SCH10S BE RT=100%	2"	2.2 M	S98	P	PA02-000001902
2	90 DEG. ELBOW (LR) BW WELDED ASTM A403-WP316/316L SCH10S	2"	2	S98	E	PB99-000038409
3	SLIP-ON FLANGE RF CL150 ASTM A182-F316/316L	2"	1	S98	F	PB01-000023955

ERECTION MATERIALS

NO	COMPONENT DESCRIPTION	SIZE	QTY	MAT'L CLASS	SHORT CODE	ITEM
4	TAG NO : HC-7203-04, QUICK COUPLING	2"	1			SPECIALTY
5	SPIRAL WOUND GASKET O-RING: SS 304 CL150 HOOP : SS 316L FILLER : GRAPHITE 4.5MM(0.18") THK.	2"	2	S98	G	PF01-000009267
6	90 STUD BOLT W/2-NUT HEAVY HEX. NUT ASTM A193-B8 CL.2 ASTM A194-8 UN/UNR x MM	5/8"	8	S98	B	PB99-000076892
7	GATE VALVE FLGD-RF CL150 ASTM A351-CF8M SS316 TRIM STELLITE SEATS BB OS&Y FLEX. WDG DISC HW. OP (VAV151)	2"	1	S98	VA	PP02-000010433
8	UB1-2A-S	2"	1			UB1-A
9	MC1-C-75-148-360	2"	1			MC1-C-V(D)
10	UB1-2A	2"	1			UB1-A
11	MC1-C-75-930-220	2"	1			MC1-C-H

CUT PIPE LENGTH

PIECE NO	LENGTH (MM)	NPD (IN)	REMARKS	PIECE NO	LENGTH (MM)	NPD (IN)	REMARKS
<1>	1454	2		<2>	223	2	
<3>	517	2					

Project PROVIDENCE
Approval For Construction
PIPING MANAGER Bea Chang Won
2026-01-12

NPS (Inch)	MAT'L CLASS	OPER. PRFSS. (bar.g)	OPER. TEMP. (°c)	DESIGN PRESS. (bar.g)	DESIGN TEMP. (°c)	TEST PRESS. (bar.g)	TEST MEDIUM	INSULATION TYPE	INSULATION TH'K (mm)	PAINT CODE	PWHT	NDE (RT,%)	STRESS
2	S98	ATM	26	3.5	60	-	S	-	-		N	0	-

REV.	DATE	DESCRIPTION	PREPARED	CHECKED	APPROVED
1	12-01-26	ISSUED FOR REVISIED	J.Y.CHO	M.H.SUNG	T.H.LIM
0	07-08-25	ISSUED FOR INFORMATION	J.Y.CHO	M.H.SUNG	T.H.LIM

PROJECT: PROJECT PROVIDENCE

LOTTE BIOLOGICS
LOTTE E&C

PART	AG	PLANT	N	AREA	CWT	CWA NO.	T1AN
P&ID NO.	K1-CWT-UT-PID-7203			PROJ. NO.	16480	FLUID	PW
GAD NO.	-			LINE NO.	2-PW-7203004-S98-N		
DWG NO.	T1AN-PW-7203004-01			SH'T NO.	1 OF 1	REV.	1

PIPE modified at 13:03:30 Dec 2025 , Drawing Created at 13:03:50 30 December 2025
PIPE NAME : 2-PW-7203004-S98-N_T1AN-01

NOTE : THE ORIGINAL AND ALL COPIES OF THIS DRAWING TOGETHER WITH COPYRIGHT ARE THE SOLE PROPERTY OF LEC, SEOUL, KOREA AND SHALL NOT BE USED FOR ANY PURPOSE WITHOUT WRITTEN PERMISSION OF LEC.